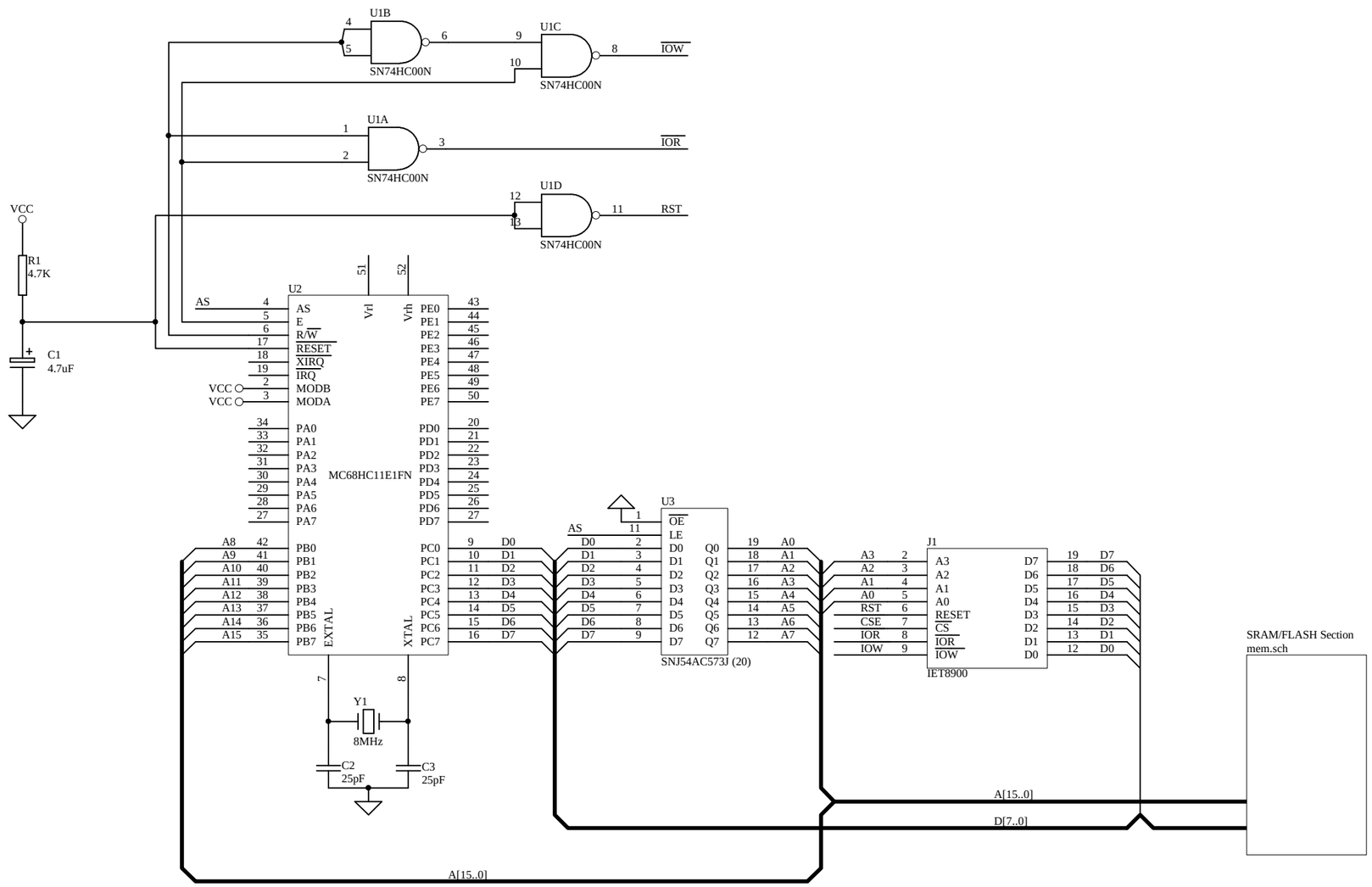

Invector Embedded Technologies		
Title: MC68HC11 to IP Dragon interface example		
Size: A3	Number	Revision: A
Date: 13-Apr-2004		Sheet 1 of 1
File: I:\Embedded\Projekt\iet2294\iet2294.ddb		Drawn By: